ZENOAH
KOMATSU

T2075-93111 (408)

OWNER'S SERVICE MANUAL

MODEL:

G260PU – for radio control Airplane
G260PUM – for radio control Boat
G260PUH – for radio control Helicopter
G231PUM – for radio control Boat
G231PUH – for radio control Helicopter

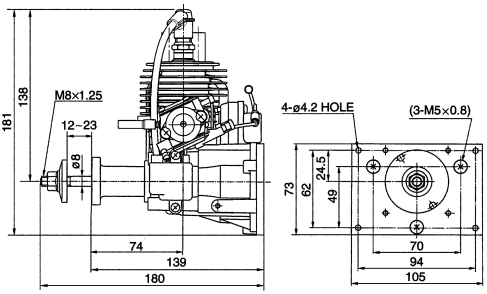

[G260PU]

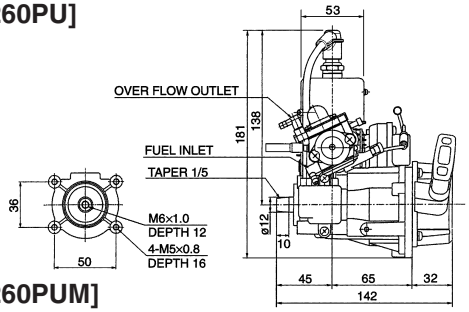

[G260PUM]
[G231PUM]

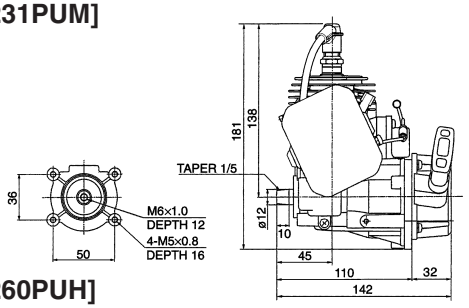

[G260PUH]
[G231PUH]

⚠ WARNING ⚠

- **These engines are designed for radio controlled products.**
- **When replacing parts, use only parts which have been certified by Komatsu Zenoah.**
- **Komatsu Zenoah assumes that no responsibility for these engines that are modified or used for any other applications.**
- **Purchaser has all responsibility against any laws and regulations existing in the countries, Komatsu Zenoah is exempt from such laws and regulations.**
- **Read and completely understand this OWNER'S SERVICE MANUAL before operating these engines.**

1. Safety Precautions

- **This manual describes the engine. For its mounting and control, see the instruction manual for the model airplane, helicopter and boat.**
- **Each engine is designed for use on each model airplane, helicopter and boat. If it is used for any other purpose, we cannot be responsible for its reliability, safety and any laws/regulations in the countries.**
- **Use genuine parts for replacement.**
- **Check the propeller, rotor and screw propeller every time. If it is damaged, replace it with a new one.**
- **If the propeller (or the rotor or the screw propeller) hit something while the engine is in operation, immediately stop the engine and check it.**
- **Start the engine on a flat surface without pebble stones.**
- **Never modify the flywheel.**
- **Check the flywheel. If it is damaged, replace it with a new one.**
- **When mixing the fuel, or operating the engine, carry it out in a well-ventilated place.**

2. Engine Assembling

The carburetor, muffler and air-funnel (air-cleaner) are not assembled at factory. Make sure that the assembling for such parts are done according to the Fig.1.

Fig.1

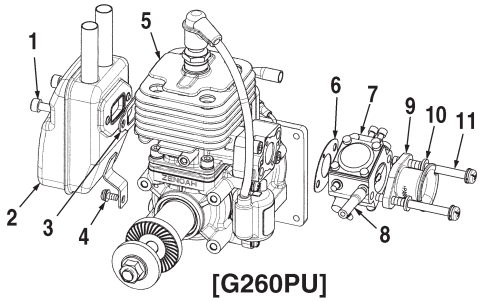

[G260PU]

1. Bolt (01252-30550)
2. Muffler (T2075-15110)
3. Gasket (1140-13141)
4. Screw (0263-30408)
5. Engine
6. Gasket (T2075-13150)
7. Carburetor (T2075-81000)
8. Tube (1000-03030)
9. Air-funnel (848ES08300)
10. Spacer (1142-83110)
11. Screw (0263-30555)

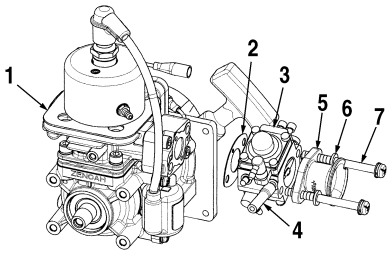

[G260PUM/G231PUM]

1. Engine
2. Gasket (T2075-13150)
3. Carburetor (T2076-81000)
4. Tube (1000-03030)
5. Air-funnel (848ES08300)
6. Spacer (1142-83110)
7. Screw (0263-30555)

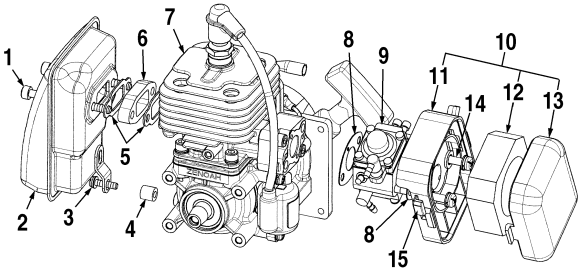

[G260PUH/G231PUH]

1. Bolt (01252-30560)
2. Muffler (T2710-15110)
3. Bolt (T1565-72211)
4. Spacer (1158-15420)
5. Gasket (1140-13141)
6. Spacer (1145-15412)
7. Engine
8. Gasket (T2075-13150)
9. Carburetor (T2077-81000)
10. Air Cleaner (848EP18300)
11. Air Cleaner Body
12. Filter
13. Air Cleaner Cover
14. Screw (0263-30555)
15. Lock Knob

CAUTION

Make sure that gasket and carburetor are mounted as fig.1.
If carburetor is mounted upside down position, the engine does not start as carburetor does not work correctly.

3. Engine Mounting

3.1 G260PU

Make sure that the G260PU is mounted on the aircraft grade plywood with more than 6mm of thickness or a mount of equivalent strength and is firmly fixed with 4 bolts.

[NOTE]

1. Be sure to set flat washers or metal plate on the reverse side of the mount to prevent bolts from sinking into the mount. Before be sure to check for loose bolts.
2. Since the engine is equipped with a float-less carburetor with a diaphragm pump, the direction of cylinder and position of fuel tank can be freely selected .
3. The Fuel head between carburetor and bottom of fuel tank must be less than 100 mm (4 inches).
4. If the rubber joint is placed between the engine and the body for anti-vibration, check if the rubber is too week and select the proper hardness of the rubber, in order to avoid the unexpected vibration under operating engine RPM zone.
   Note carefully that if the engine is vibrated at idling, then the idling RPM is likely to get unstable due to overflow at carburetor by the vibration.
5. Tighten the nut (M8) with a torque of 80~120 kg·cm by using a spark plug socket wrench, which is applying about 10~15 kg by hand as shown in the figure.
   (NOTE)
   Do not tighten the nut (M8) with too large torque, that may damage the stud.

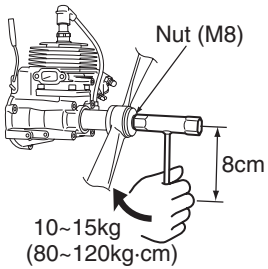

3.2 G260PUM/G260PUH/G231PUM/G231PUH

Make sure that the engine for boat or helicopter is mounted according to the instruction manual to be provided by boat or helicopter manufacturer.
In case such instruction manual is not available, make sure that engine is mounted by at least 4 points at engine's PTO side and recoil starter side.

[NOTE]

1) Be sure to set flat washers or metal plates on the reverse side of the mount to prevent bolts from sinking into the mount.
   Be sure to check if the bolts are security fastened.
2) The fuel head between carburetor and bottom of fuel tank must be less than 100 mm (4 inches)

4. Propeller, Rotor & Screw Propeller

4.1 Propeller for airplane

The recommended prop sizes are as shown in the table bellow.

Diameter x Pitch (in.)
18 x 6 ~ 10, 16 x 8 ~ 12

Be sure to use a propeller which makes the engine speed approximately 7,000~8,500 rpm while the airplane is flying.

CAUTION

When mounting the spinner, set a pin on the hub with more than 3mm of diameter, thus preventing slipping.

4.2 Rotor for helicopter

- Adjust the rotor-pitch to obtain 9,000~10,500 rpm of the engine at full throttle operation.
- Make sure to use the rotor which is recommended by helicopter manufacturer.

4.3 Screw Propeller for boat

The exhaust system (e.g., muffler) is not equipped with as standard. When you select the exhaust system for the engine, check how many the engine speed (rpm) is required when the maximum output is generated by using the muffler you select.
And then decide the appropriate the screw propeller that would meet such engine speed (rpm) that the muffler required.
In general, standard size of the screw propeller (Surface prop type) are as follows:

Diameter (mm)
65 ~ 75

Pitch ratio (mm)
1.9 ~ 1.4

5. Fuel

- Mix gasoline (octane over 90) and high grade 2 cycle engine oil (mixing use type; F3C grade or ISO EGC grade) at mixing ratio 25~40:1.
- The mixing ratio is according to the oil recommendation.

[NOTE]

1) Never use any alcohol fuel or alcohol added fuel, or the rubber parts in the carburetor. If not, the engine will be damaged.
2) Gasoline is very flammable. Avoid smoking, bringing any fires near fuel.
3) To prevent all possible problems on fueling system, make sure to use the fuel filter which has more than 300 mesh or equivalent and gasoline proof rubber pipe or equivalent.
   Incorrect fuel filter use causes engine trouble like carburetor's fuel passage stuffing or piston surface scratching etc.

6. Starting

6.1 G260PU

A: HAND FLIP START

Since the G260PU is equipped with the ultra compact C.D.I. type flywheel magneto ignition system, it should be started according to the following procedure;

✻ The magneto system of G260PU is designed in such a way that when the exhaust port is closed by the piston, that is, when the compression stroke starts (Refer to Fig.2-A), sparks are never produced on spark plug no matter how fast the propeller may be flipped. Be sure to quickly flip the propeller when the edge of magnet on the rotor is approaching the coil (Fig.2-B). It means that the propeller should be quickly flipped about 90 degrees in crank angle before the compression is about to start.

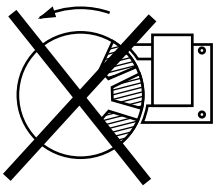

Fig.2-A

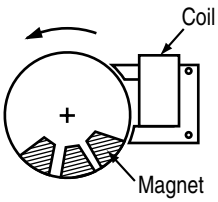

Fig.2-B

● **How to Start**

a. Fill the fuel tank with the fuel.
b. Choke the carburetor and turn the propeller a few times until the fuel appears at the carburetor.
c. Set the throttle valve at the idle position or at the position slightly open from the idle position. Quickly flip the propeller in the counterclockwise direction according to the procedure described above. Flip the propeller a few times.
d. When the first combustion noise is heard, open the choke.
e. Flip the propeller, then engine will start.

CAUTION

- **Make sure that airplane is hold by helper or fixed by rope not to move by propeller thrust.**
- **Be sure to wear a thick glove when flipping the propeller. Use all fingers, except thumb, for the flipping operation.**

B: ELECTRIC MOTOR START

Make sure to fix a spinner and make sure that the helpers hold the airplane firmly. Also make sure that the electric motor has a power enough to run the engine at minimum 1,100 rpm.

● **How to start**

a. Fill the fuel tank with the fuel.
b. Choke the carburetor.
c. Set the throttle valve at idle position or at the position slightly open from the idle position (Never open the throttle more than 1/4 of full throttle stroke).
d. Turn the engine by electric motor until first combustion noise is heard.
e. Open the choke and keep the throttle valve at slight open position from idle position.
f. Turn the engine by electric motor, then the engine will start.

CAUTION

- **Too much run by electric motor at choke condition may have a chance to wet spark plug.**
  In this case, change the spark plug or dry it thoroughly and remove fuel rest in the cylinder by turning engine under full throttle, open choke and without spark plug installing.
- **When engine is warm, carburetor choking may not be necessary.**

6.2 G260PUM/G260PUH/G231PUM/G231PUH

a. Fill the fuel tank with the fuel.
b. Push the priming bulb upper the carburetor until fuel appears in the priming bulb.
c. Choke the engine and open the throttle valve approximately 1/4~1/3 of the full open position.
d. Make sure that the "Lock Knob" of aircleaner is positioned at lock position. (G260PUH/G231PUH)

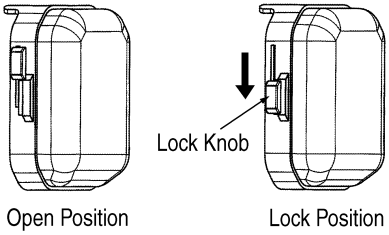

Fig.3

e. Quickly pull the starter cord when the initial combustion noise is heard.
f. When the initial combustion noise is heard, open the choke, set the throttle valve at the idle position or at the position slightly open from the idle position and quickly pull the starter cord a few more times. Then the engine starts.

7. How To Stop The Engine

For stopping the engine, the black lead wire from the coil should be grounded to the engine body, or the throttle valve should be closed completely.

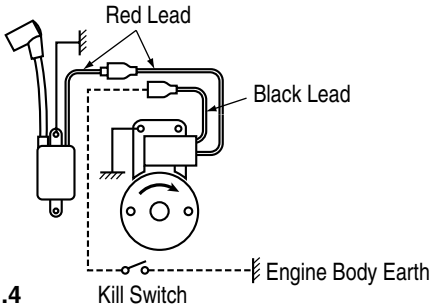

Fig.4

8. Carburetor Adjustment

The carburetor is provided with 3 adjust screws which are set to the best (approximately) positions by our company, but they may need a little adjustment depending on the temperature, atmospheric pressure (altitude), etc. of the area where the engine is used. Start the engine without making any adjustments. Make readjustments only when the engine shows any mal-running.

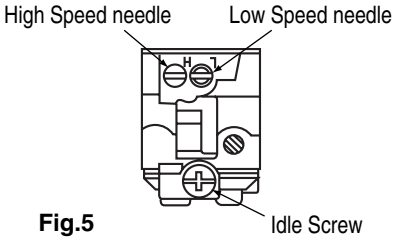

Fig.5

Standard opening of each needle as follows;

	H	L
G260PU	1 3/8 ± 1/4	1 3/8 ± 1/4
G260/G231PUM	1 5/8 ± 1/4	1 ± 1/4
G260/G231PUH	1 7/8 ± 1/4	1 1/4 ± 1/4

Idle Screw:

Turning this screw clockwise increases the idling R.P.M. Turning it counterclockwise decreases the idling R.P.M

Low Speed needle:

This is the fuel adjust screw (not the air screw). Turning this needle clockwise makes the mixture gas leaner and turning it counterclockwise makes it richer.

Set this needle at a position which is 1/4 open from best mixture (maximum R.P.M.) position.

High Speed needle:

Turning this needle clockwise makes the mixture gas leaner and turning it counterclockwise richer. Set this needle at a position which is 1/8~1/4 open from the maximum R.P.M. position while the airplane is on ground.

CAUTION

1. **Do not tighten the High and Low Speed needles too firmly.**
2. **When the unit has just started and the engine is not warm enough, there may be insufficient acceleration and the engine may be stopped. Be sure to perform idling before operation.**

9. Engine Break-In

No specific break-in is required.
The engine is gradually broken-in as it is used and the output is also gradually increased.
For checking the whole conditions of the airplane, boat and helicopter, it may be better to operate the engine at slow RPM for 1/3 tank and mid-high RPM for 2/3 tank.

10. Operation

- The engine is already tuned up to get high performance, and needs correct maintenance to keep such high performance.
- The details for operation as complete product may be provided from complete product manufacturer.
- Always keep well maintenance according to the Maintenance clause described in this owner's service manual.

11. Maintenance

1) MAINTENANCE CHART

Items	Action	Before Use	Every 25 hours	Every 100 hours	Note
Leakage, Damage/Crack	Check	✔	✔	✔	
Idling Speed	Check/Adjust	✔	✔	✔	
Air-cleaner (PUH)	Check/Cleaning	✔	✔	✔	Replace if necessary
Spark Plug(gap)	Check/Adjust		✔	✔	↑
Cylinder(barrel)	Check/Cleaning		✔	✔	↑
Piston, Ring	Check/Cleaning		✔	✔	↑
Muffler & Bolt	Check/Cleaning	✔	✔	✔	↑
Bearings	Check/Cleaning		✔	✔	↑
Crank Shaft	Check/Alignment			✔	↑
Rotor	Check		✔	✔	↑
Propeller Hub (PU)	Check/Alignment		✔	✔	↑
Water Jacket (PUM)	Check/Leakage	✔	✔	✔	↑

2) SPECIFICATIONS & TECHNICAL DATA

Items	unit	G260PU	G260PUM	G260PUH	G231PUM	G231PUH
Type	—	Air Cooled	Water Cooled	Air Cooled	Water Cooled	Air Cooled
Bore x Stroke	mm	34x28	←	←	32x28	←
Displacement	cm^3	25.4	←	←	22.5	←
Effective Compression Ratio	—	8.4	←	←	←	←
Carburetor	Type (Walbro)	WT-645	WT-644	WT-643	WT-644	WT-643
	Venturi (mm)	ø12.7	←	←	←	←
Air Cleaner		—	—	Dry Type	—	Dry Type
Starting	—	Hand flipping or Electric Motor	Recoil Starter	←	←	←
Ignition	Type	CDI	←	←	←	←
	BTDC°/rpm	28/7000	30/7000	←	←	←
Spark Plug	STD	RZ7C	←	←	←	←
	Option	—	CMR6H/7H	—	CMR6H/7H	—
Idle Speed	rpm	1800 APC 18x8	3500	3000	3500	3000
Max. Power	kW/rpm	1.62/12000	2.16/12000	1.71/13000	2.09/12000	1.58/13000
Max. Torque	N·m/rpm	1.48/9000	1.94/9500	1.42/9500	1.79/10000	1.34/9000
Fuel Consumption	g/kW·H	790	710	760	720	700
Weight	kg	1.69 (✻ 1.52)	1.54	1.77 (✻ 1.57)	1.55	1.78 (✻ 1.58)

(✻): Without Muffler Specifications are subject to change without notice.

3) MAINTENANCE SPECIFICATIONS

	Items	G260PU/PUM/PUH		G231PUM/PUH		Measuring Device	Remarks
		Standard	Limit	Standard	Limit		
Cylinder	Bore (mm)	ø34	Plating damaged	ø32	Plating damaged	Eye Checking	
Piston	Diameter (mm)	ø33.97	ø33.87	ø31.97	ø31.87	Micro Meter	At the skirt end and the right angle to the piston pin.
	Piston Ring Groove width (mm)	1.01	1.11	1.01	1.11	Thickness Gauge	
	Piston Pin Hole (mm)	ø8.01	ø8.05	ø8.01	ø8.05	Cylinder Gauge	
	Clearance between Piston and Cylinder (mm)	0.03~0.06	0.15	0.03~0.06	0.15	Micro Meter Cylinder Gauge	
	Clearance between Groove and Piston Ring (mm)	0.02~0.04	0.1	0.02~0.04	0.1	Thickness Gauge	
Piston Ring	End Gap (mm)	0.05~0.25	0.5	0.05~0.25	0.5	Thickness Gauge	When inserted in a new cylinder.
	Width (mm)	0.98	0.93	0.98	0.93	Micro Meter	
Piston Pin Diameter (mm)		ø8	ø7.98	ø8	ø7.98	Micro Meter	
Connecting Rod Small end (mm)		ø11	ø11.05	ø11	ø11.05	Cylinder Gauge	
Crankshaft Dia. at Main Bearing (mm)		ø12	ø11.98	ø12	ø11.98	Micro Meter	
	Eccentricity (mm)	—	0.07	—	0.07	Dial Gauge	
	Axial Play (mm)	—	0.5	—	0.5	Thickness Gauge	
	Main Bearing	—	Gritty or Feels Flat Spot	—	Gritty or Feels Flat Spot	—	

4) CARBURETOR

Items	Unit	Standard	Measuring Device
Metering Lever set	mm	1.65 ± 0.16	Vanier
Inlet Valve Opening Pressure	MPa	0.13~0.23	Leak Tester
	kg/cm²	1.3~2.3	
Inlet Valve Closing Pressure	MPa	0.07~0.17	Leak Tester
	kg/cm²	0.7~1.7	

5) IGNITION SYSTEM

Items			Standard	Limit	Measuring Device	Remarks
Spark Plug Air Gap (mm)			0.6~0.7	0.7	Thickness Gauge	
Ignition Coil/Rotor Air Gap (mm)			0.3	0.4	Thickness Gauge	
Coil Resistance (Ω)	Source Coil	1160-71211	∞ / 185Ω	—	Volt Meter	Coil core – Red wire / Coil core – Black wire
		2629-71210	∞ / 255Ω	—		Coil core – Red wire / Coil core – Black wire
	Ignition Coil	2629-71311	2.1kΩ	—	Volt Meter	Sparkplug wire – Red wire
			0.1 Ω	—		Red wire – Earth core
			2.1 kΩ	—		Sparkplug wire – Earth core

6) TIGHTENING TORQUE

Items	Screw Size	Standard		Limit		Remarks
		N·m	kg·cm	N·m	kg·cm	
Carburetor	M5 (P=0.8)	3.4	35	2.9~3.9	30~40	
Insulator	M5 (P=0.8)	4.4	45	3.9~4.9	40~50	
Rotor	M8 (P=1.0)	12.7	130	9.8~14.7	100~150	
Cylinder	M5 (P=0.8)	6.9	70	4.9~8.8	50~90	
Crankcase	M5 (P=0.8)	5.9	60	4.9~6.9	50~70	
Spark Plug	M10 (P=1.0)	10.8	110	8.8~12.8	90~130	
Muffler	M5 (P=0.8)	8.8	90	6.9~9.8	70~100	
IG Coil	M4 (P=0.7)	1.8	18	1.5~2.0	15~20	
SO Coil	M4 (P=0.7)	1.8	18	1.5~2.0	15~20	
Recoil Starter	M4 (P=0.7)	1.8	18	1.5~2.0	15~20	
Stud (hub)	M6 (P=1.0)	9.8	100	7.8~11.8	80~120	with Locktight glue
Nut, Propeller	M8 (P=1.25)	9.8	100	7.8~11.8	80~120	
Water Jacket	M3 (P=0.5)	1.5	15	1.0~2.0	10~20	
Mount Plate	M5 (P=0.8)	3.9	40	3.4~4.4	35~45	

12. Special Tools

	Part Name	Part No.	External Appearance	Usage
1	Puller Assy	1490-96101	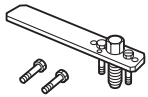	To remove rotor.
2	Piston Stopper	4810-96220	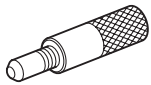	To hold crankshaft when disassembling/assembling the rotor.
3	Rod Assy	1101-96220		To remove/install piston pin.
4	Hex Wrench	3304-97611	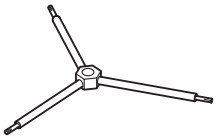	For socket screw of 4mm, 5mm and 6mm.
5	Snap Ring Pliers	5500-96110	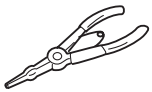	To remove snap ring.

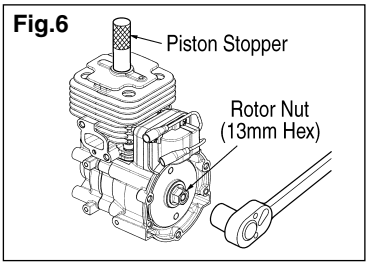

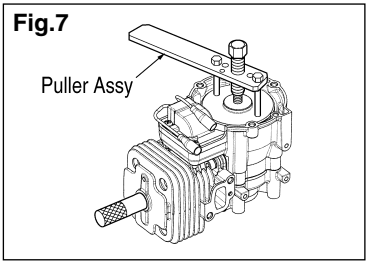

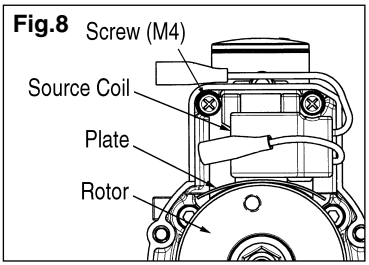

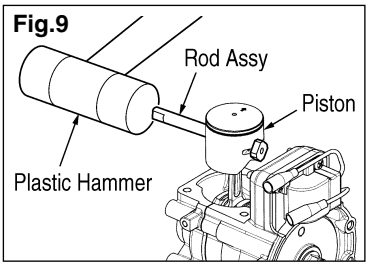

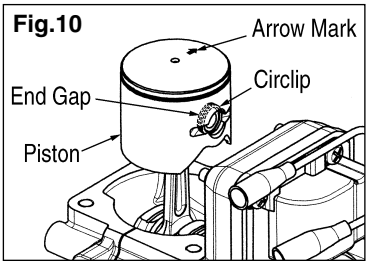

1. REMOVING ROTOR

1) Remove the spark plug, fit the piston stopper (P/N: 4810-96220) into the cylinder.
2) Remove the rotor nut (13mm Hex) by (ratchet) spanner. (Fig.6)
3) Remove the rotor using puller assy (P/N: 1490-96101). (Fig.7)

2. ASSEMBLING ROTOR/SOURCE COIL (Fig.8)

1) Insert the 0.3mm plate in between the rotor magnet metal and the coil iron core
2) Tighten screws (M4x2) while pressing the source coil toward rotor.
3) Remove the 0.3mm plate and confirm that the air gap is 0.3~0.4mm by thickness gage.

3. REMOVING PISTON PIN (Fig.9)

1) Remove snap rings from both sides of the piston pin.
2) Engage the rod assy(1101-96220) to the piston pin and gently tap with a plastic hammer to push out the pin while holding piston firmly.

CAUTION

Hard hammering may damage the big end of the connecting rod.

4. INSTALLING PISTON (Fig.10)

1) Make sure to point the arrow mark on the piston to the exhaust side.
2) Fit the circlip in the groove so as to face the end gap below.

CAUTION

Deformed circlip may come off during engine operation and damage the engine.

14. Trouble Shooting

1) ENGINE DOES NOT START

Description	Cause	Countermeasure
No spark in the spark plug		
Spark Plug	1. Wet spark, plug electrodes	Make them dry
	2. Carbon deposited on the electrodes	Cleaning
	3. Insulation failure by insulator damage	Exchange
	4. Improper spark gap	Adjust to 0.6~0.7mm
	5. Burn out of electrodes	Exchange
Magneto	1. Ignition coil inside failure	Exchange
	2. Damaged cable sheath or disconnected cable	Exchange or repair
Switch	1. Switch is OFF	ON the switch
	2. Switch failure	Exchange
	3.Primary wiring earthed	Repair
Sparks appear in the spark plug		
Compression & fueling is normal	1. Over sucking of fuel	Drain excess fuel
	2. Too rich fuel	Adjust carburetor
	3. Overflow	Carburetor adjust or exchange
	4. Clogging of air cleaner	Wash with mixed gasoline
	5. Faulty fuel	Change with proper fuel
Fueling normal but poor compression	1. Worn out cylinder, piston, or piston ring	Exchange
	2. Gas leakage from cylinder and crank case gasket	Apply liquid gasket and reassemble.
No fuel supply	1. Choked breather air hole	Cleaning
	2. Clogged carburetor	Cleaning
	3. Clogged fuel filter	Exchange fuel filter

2) LACK OF POWER OR UNSTABLE RUNNING

Description	Cause	Countermeasure
Compression is normal and no misfire	1. Air penetration from fuel pipe joints, etc	Secure connection
	2. Air penetration from intake tube joint or carburetor joint	Change gasket or tightening screws
	3. Water in fuel	Change with good fuel
	4. Piston start to seizure	Replace piston(and cylinder)
	5. Muffler choked with carbon	Cleaning
Overheating	1. Fuel too lean	Adjust carburetor
	2. Clogging of cylinder fin with dust	Cleaning
	3. Poor fuel quality	Exchange with proper fuel
	4. Carbon deposited in the combustion chamber	Cleaning
	5. Spark plug electrode red hot	Thoroughly clean, adjust spark gap [0.6~0.7(0.023~0.028in)]
Others	1. Dirty air cleaner	Wash with mixed gasoline
	2. Over loading	Reduce load

15. Parts list

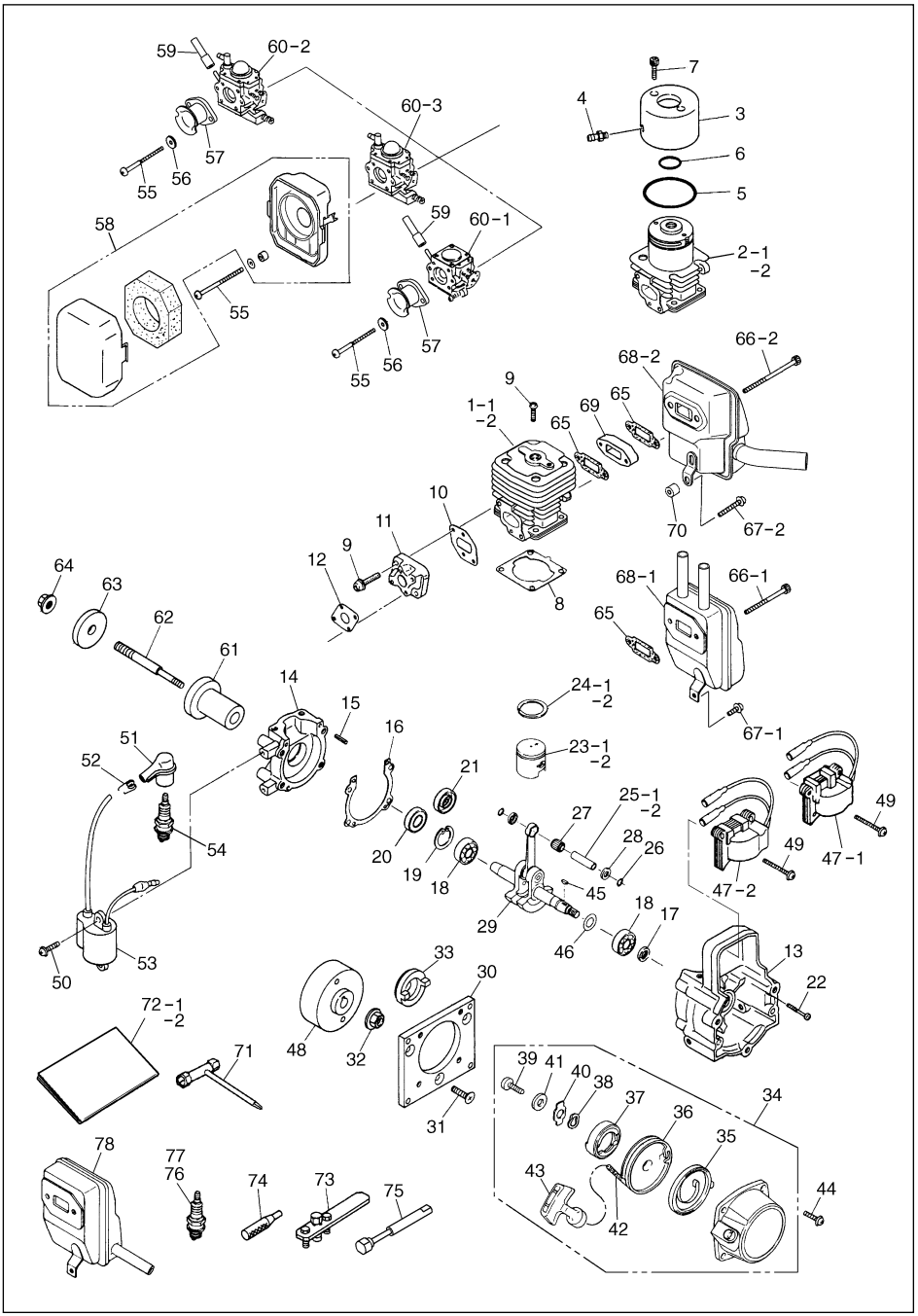

Key#	Part Number	Description	Q'TY/UNIT					Remarks
			G260PU	G260PUM	G260PUH	G231PUM	G231PUH	
1-1	T2075-12110	CYLINDER	1	–	1	–	–	
1-2	T2077-12110	CYLINDER	–	–	–	–	1	
2-1	T2076-12110	CYLINDER	–	1	–	–	–	
2-2	T2078-12110	CYLINDER	–	–	–	1	–	
3	T2076-12210	JACKET	–	1	–	1	–	
4	07851-00515	JOINT	–	2	–	2	–	
5	07000-13040	O-RING 3x40	–	1	–	1	–	
6	T2076-12320	O-RING 1.5x15.5	–	1	–	1	–	
7	1160-12330	BOLT M3x8	–	2	–	2	–	
8	T2075-13120	GASKET, cylinder	1	1	1	1	1	
9	3310-12281	BOLT M5x20	6	6	6	6	6	
10	T2075-13150	GASKET, insulator	1	1	1	1	1	
11	1148-13162	INSULATOR	1	1	1	1	1	
12	T2075-14120	GASKET, carburetor	1	1	2	1	2	
	T2075-21100	CRANKCASE COMP.	1	1	1	1	1	
13	–	CRANKCASE (R)	1	1	1	1	1	
14	–	CRANKCASE (F)	1	1	1	1	1	
15	2629-21130	PIN	3	3	3	3	3	
16	T2075-21140	GASKET	1	1	1	1	1	
17	2169-21210	SEAL 12x22x7	1	1	1	1	1	
18	1155-21240	BEARING	2	2	2	2	2	
19	04065-02812	SNAPRING	1	1	1	1	1	
20	06034-06001	BEARING	1	–	1	–	1	
21	1850-21220	SEAL 12x28x7	–	1	–	1	–	
22	01252-30530	BOLT M5x30	4	4	4	4	4	
23-1	T2088-41110	PISTON	1	1	1	–	–	
23-2	T2070-41110	PISTON	–	–	–	1	1	
24-1	T2088-41210	RING	1	1	1	–	–	
24-2	T2070-41210	RING	–	–	–	1	1	
25-1	1600-41310	PISTON PIN	1	1	1	–	–	
25-2	1101-41310	PISTON PIN	–	–	–	1	1	
26	1260-41320	SNAP RING	2	2	2	2	2	
27	5500-41410	BEARING	1	1	1	1	1	
28	1101-41340	WASHER	2	2	2	2	2	
29	T2075-42000	CRANKHAFT COMP.	1	1	1	1	1	
30	1155-74110	MOUNT	1	1	1	1	1	
31	0262-10516	SCREW M5x16	3	3	3	3	3	
32	1650-43230	NUT M8	1	–	–	–	–	
33	1160-75210	PULLEY	–	1	1	1	1	
34	1861-75101	RECOIL ASSY	–	1	1	1	1	
35	1861-75120	• SPRING	–	1	1	1	1	
36	5990-75131	• REEL	–	1	1	1	1	
37	5990-75141	• RATCHET	–	1	1	1	1	
38	1861-75150	• WASHER	–	1	1	1	1	
39	1483-75270	• SCREW	–	1	1	1	1	
40	1487-75160	• RETANIER	–	1	1	1	1	
41	1487-75170	• WASHER	–	1	1	1	1	
42	1861-75180	• ROPE	–	1	1	1	1	
43	1490-75181	• KNOB	–	1	1	1	1	
44	0263-30414	SCREW M4x14	–	4	4	4	4	
45	1000-43240	KEY	1	1	1	1	1	
46	1140-43250	SHIM	0~3	0~3	0~3	0~3	0~3	
47-1	2629-71210	COIL (grey)	1	–	–	–	–	
47-2	1160-71211	COIL (red)	–	1	1	1	1	
48	1155-71110	ROTOR	1	1	1	1	1	
49	0260-30422	SCREW M4x22	2	2	2	2	2	
50	0263-30414	SCREW M4x14	2	2	2	2	2	
51	T2075-72210	PLUG CAP	1	1	1	1	1	
52	1400-72121	SPRING	1	1	1	1	1	
53	2629-71311	COIL	1	1	1	1	1	
54	3699-91809	SPARK PLUG RZ7C	1	1	1	1	1	
55	0263-30555	SCREW M5x55	2	2	2	2	2	

Key#	Part Number	Description	Q'TY/UNIT					Remarks
			G260PU	G260PUM	G260PUH	G231PUM	G231PUH	
56	1142-83110	SPACER 5x10x1.6	2	2	–	2	–	
57	848ES08300	AIR-funnel	1	1	–	1	–	
58	848EP18300	CLEANER ASSY	–	–	1	–	1	
59	1000-03030	TUBE	1	1	–	1	–	
60-1	T2075-81000	CARBURETOR ASSY WT-645	1	–	–	–	–	
60-2	T2076-81000	CARBURETOR ASSY WT-644	–	1	–	1	–	
60-3	T2077-81000	CARBURETOR ASSY WT-643	–	–	1	–	1	
61	1152-43260	HUB	1	–	–	–	–	
62	1152-43281	STUD	1	–	–	–	–	
63	1152-43290	WASHER	1	–	–	–	–	
64	3350-53410	NUT M8	1	–	–	–	–	
65	1140-13141	GASKET, muffler	1	–	2	–	2	
66-1	01252-30550	BOLT M5x50	2	–	–	–	–	
66-2	01252-30560	BOLT M5x60	–	–	2	–	2	
67-1	0263-30408	SCREW M4x8	1	–	–	–	–	
67-2	1565-72211	BOLT M4x16	–	–	1	–	1	
68-1	T2075-15110	MUFFLER	1	–	–	–	–	
68-2	T2710-15110	MUFFLER	–	–	1	–	1	
69	1145-15412	SPACER	–	–	1	–	1	
70	1158-15420	SPACER	–	–	1	–	1	
71	T3039-91310	SOCKET	1	1	1	1	1	
72-1	T2075-93111	MANUAL (English)	1	1	1	1	1	
72-2	T2075-93121	MANUAL (Japanese)	–	–	1	–	1	
73	1490-96101	PULLER ASSY	1	1	1	1	1	OPTION
74	4810-96220	STOPPER	1	1	1	1	1	OPTION
75	1101-96220	ROD ASSY	1	1	1	1	1	OPTION
76	3699-91975	SPARK PLUG CMR6H	–	1	–	1	–	OPTION For G260PUM/G231PUM Only
77	3699-91867	SPARK PLUG CMR7H	–	1	–	1	–	
78	1148-08010	MUFFLER	1	1	1	1	1	OPTION

CARBURETOR INNER PARTS

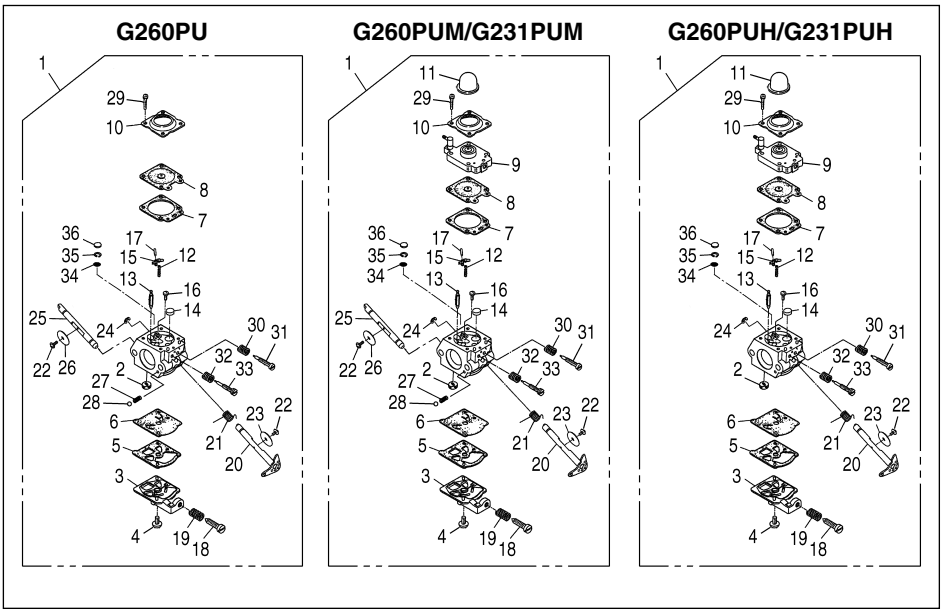

Key#	Part Number	Description	Q'TY/ UNIT
G260PU			
1	T2075-81000	CARBURETOR-A	1
2	3306-81380	• SCREEN	1
3	3080-81120	• COVER	1
4	3310-81130	• SCREW	1
5	3304-81140	• GASKET	1
6	1172-81150	• DIAPHRAGM	1
7	2850-81290	• GASKET	1
8	3310-81260	• DIAPHRAGM	1
10	3310-81280	METERING COVER	1
12	2867-81270	• SPRING	1
13	3356-81310	• VALVE, inlet	1
14	1480-81420	• PLUG, welch	1
15	3310-81230	• LEVER	1
16	3310-81240	• SCREW	1
17	3310-81250	• PIN	1
18	2630-81330	• SCREW	1
19	3350-81380	• SPRING	1
20	1172-81370	• SHAFT, throttle	1
21	2670-81410	• SPRING	1
22	2880-81470	• SCREW	2
23	3310-81340	• VALVE, throttle	1
24	1148-81390	• RING	1
25	T2070-81460	• SHAFT, choke	1
26	T2075-81450	• VALVE, choke	1
27	3350-81350	• SPRING	1
28	3350-81220	• BALL	1
29	3310-81351	• SCREW	4
30	1491-81160	• SPRING	1
31	1148-81171	• NEEDLE, low speed	1
32	3080-81320	• SPRING	1
33	T2070-81330	• NEEDLE, high speed	1
34	3304-81450	• SCREEN	1
35	3304-81441	• RING	1
36	3360-81440	• PLUG	1
G260PUM/G231PUM			
1	T2076-81000	CARBURETOR-A	1
2	3306-81380	• SCREEN	1
3	3080-81120	• COVER	1
4	3310-81130	• SCREW	1
5	3304-81140	• GASKET	1
6	1172-81150	• DIAPHRAGM	1
7	1751-81470	• GASKET	1
8	3310-81260	• DIAPHRAGM	1
9	T2070-81210	• BODY-A	1
10	1751-81520	• COVER	1
11	1751-81510	• PUMP	1
12	2867-81270	• SPRING	1
13	3356-81310	• VALVE, inlet	1
14	1480-81420	• PLUG, welch	1
15	3310-81230	• LEVER	1
16	3310-81240	• SCREW	1
17	3310-81250	• PIN	1
18	2630-81330	• SCREW	1
19	3350-81380	• SPRING	1
20	1172-81370	• SHAFT, throttle	1
21	2670-81410	• SPRING	1
22	2880-81470	• SCREW	2
23	3310-81340	• VALVE, throttle	1
24	1148-81390	• RING	1
25	T2070-81460	• SHAFT, choke	1
26	T2075-81450	• VALVE, choke	1
27	3350-81350	• SPRING	1
28	3350-81220	• BALL	1
29	1148-81530	• SCREW	4
30	1491-81160	• SPRING	1
31	1148-81171	• NEEDLE, low speed	1
32	3080-81320	• SPRING	1
33	T2070-81330	• NEEDLE, high speed	1
34	3304-81450	• SCREEN	1
35	3304-81441	• RING	1
36	3360-81440	• PLUG	1
G260PUH/G231PUH			
1	T2077-81000	CARBURETOR-A	1
2	3306-81380	• SCREEN	1
3	3080-81120	• COVER	1
4	3310-81130	• SCREW	1
5	3304-81140	• GASKET	1
6	1172-81150	• DIAPHRAGM	1
7	1751-81470	• GASKET	1
8	3310-81260	• DIAPHRAGM	1
9	T2070-81210	• BODY-A	1
10	1751-81520	• COVER	1
11	1751-81510	• PUMP	1
12	2867-81270	• SPRING	1
13	3356-81310	• VALVE, inlet	1
14	1480-81420	• PLUG, welch	1
15	3310-81230	• LEVER	1
16	3310-81240	• SCREW	1
17	3310-81250	• PIN	1
18	2630-81330	• SCREW	1
19	3350-81380	• SPRING	1
20	1172-81370	• SHAFT, throttle	1
21	2670-81410	• SPRING	1
22	2880-81470	• SCREW	1
23	3310-81340	• VALVE throttle	1
24	1148-81390	• RING	1
29	1148-81530	• SCREW	4
30	1491-81160	• SPRING	1
31	1148-81171	• NEEDLE, low speed	1
32	3080-81320	• SPRING	1
33	T2070-81330	• NEEDLE, high speed	1
34	3304-81450	• SCREEN	1
35	3304-81441	• RING	1
36	3360-81440	• PLUG	1

16. Warranty

1) SCOPE OF APPLICATION

This engine manufactured by Komatsu Zenoah Co. (hereinafter referred as KZ) and sold to the user directly or through distributor/manufacturer, shall entitle to be covered by this warranty.

2) LIMIT OF WARRANTY

KZ warrants that ;

1. The quality disclosed in the specifications.
2. The engine which shall be considered defective by KZ, caused by material or production fault.

3) LIMITS OF COMPENSATION

1. KZ compensates such quality, material and production faults by repairing or replacing through distributor/manufacturer.
2. KZ shall not compensate any other accompanied or benefit losses caused to user and distributor/manufacturer by such faults and through repairing or replacing.

4) TERMS OF WARRANTY

3 months after purchased by user subject to 12 months from produced month.

5) EXEMPT FROM WARRANTY

KZ shall not warrant this engine even if the fault has been caused during the period of terms of warranty, in case of that ;

1. Any faults, failures caused from neglect of this OWNER'S SERVICE MANUAL for proper operation and maintenance.
2. Any modifications not approved by KZ.
3. Normal abrasion and deterioration.
4. Consuming parts.
5. Using any parts which have not been certified by KZ.

ZENOAH KOMATSU

KOMATSU ZENOAH CO.

Head Office : 1-9 Minamidai, Kawagoe-city, Saitama, 350-1192 Japan
Phone: (+81)49-243-1115 Fax: (+81)49-243-7197